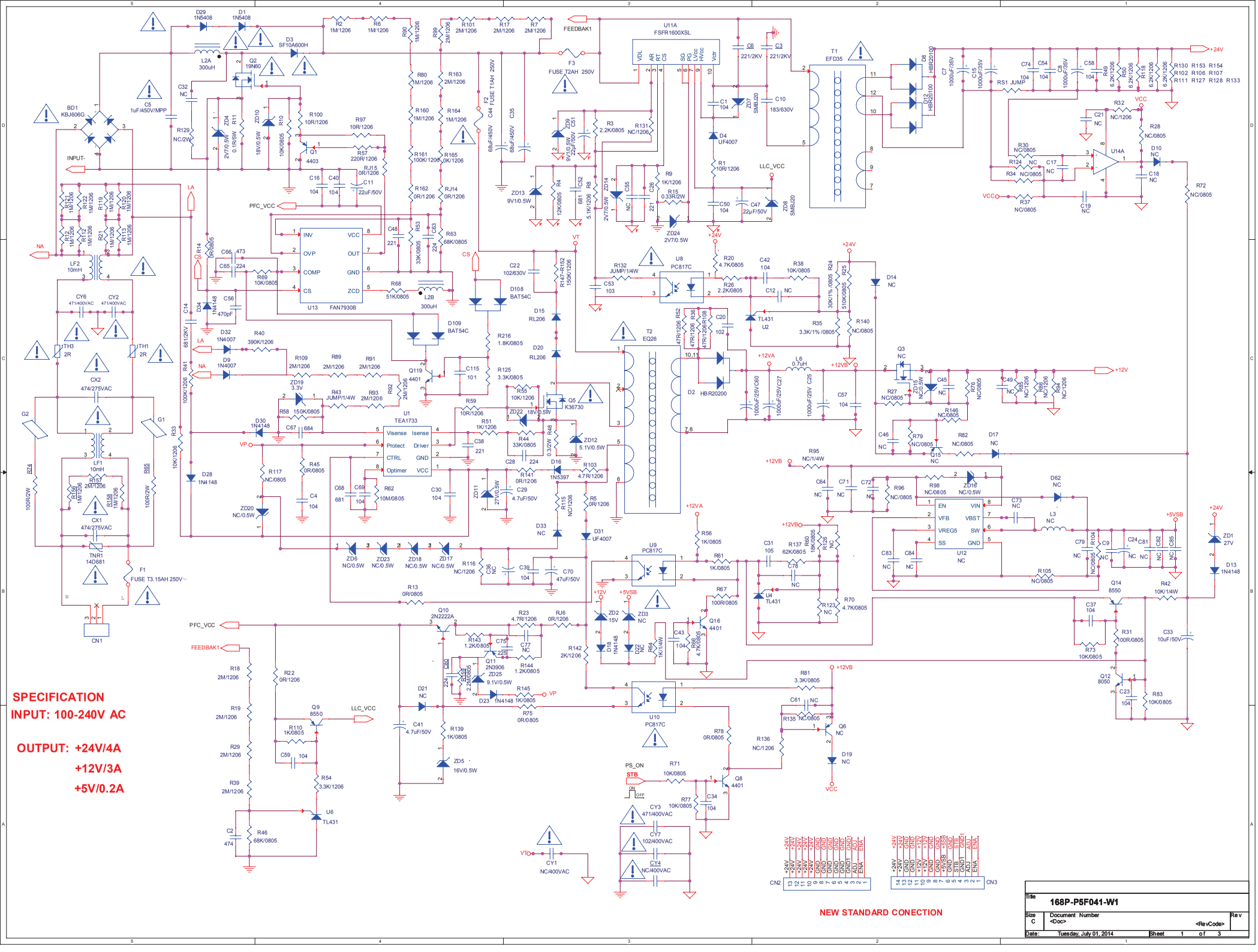
SPECIFICATION
INPUT: 100-240V AC
OUTPUT: +24V/4A
+12V/3A
+5V/0.2A
NEW STANDARD CONECTION
U13 FAN7930B
U11A FSFR1600XSL
U1 TEA1733
T1 EFD35
T2 EQ26
U8 PC817C
U9 PC817C
U10 PC817C
U12 NC
U14A
CN1
CN2
CN3
Title
168P-P5F041-W1
Size C
Document Number
<Doc>
<RevCode>
Rev
Date: Tuesday, July 01, 2014
Sheet 1 of 3